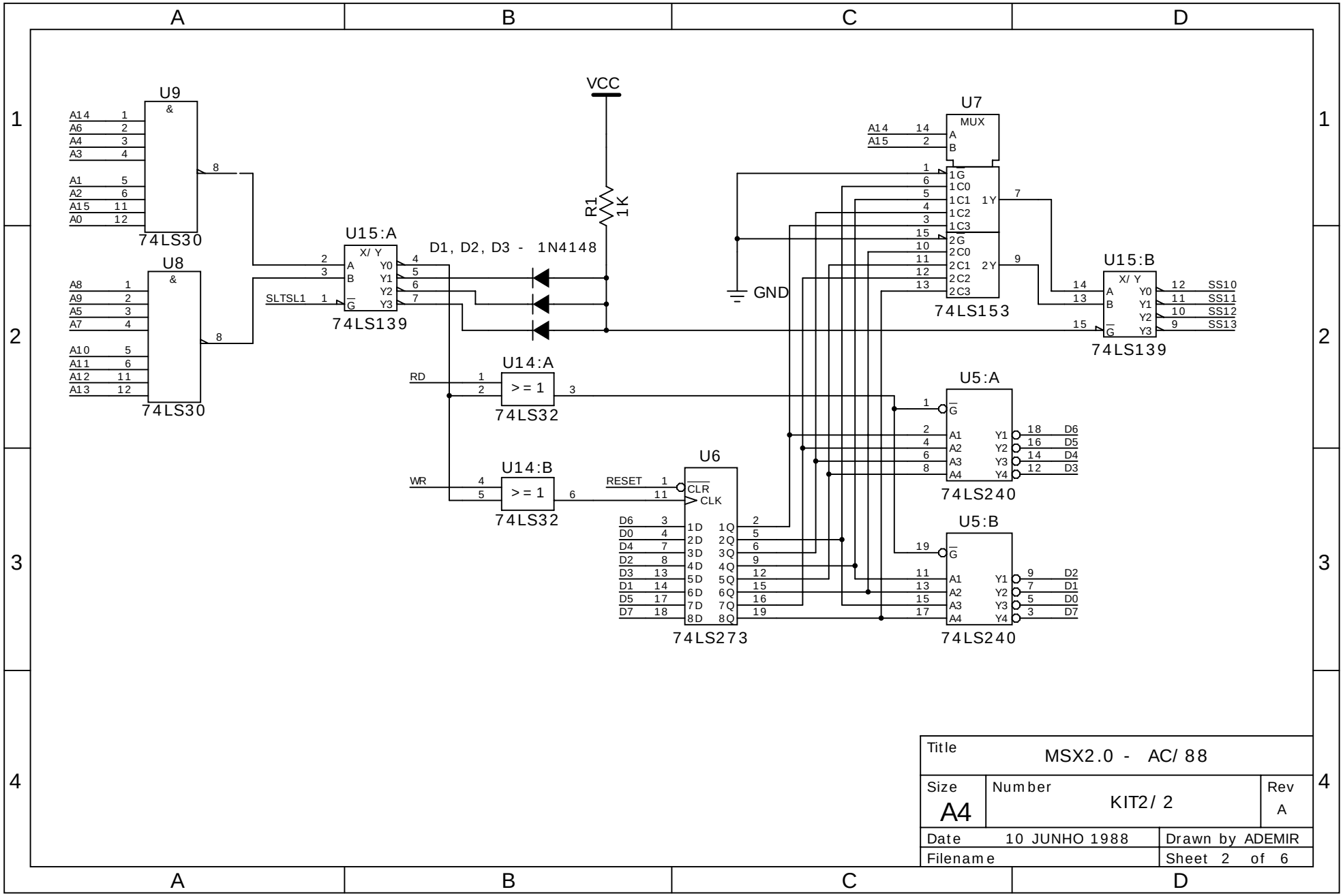

Title	MSX2.0 - AC/88	
Size A4	Number KIT2/2	Rev A
Date 10 JUNHO 1988		Drawn by ADEMIR
Filename		Sheet 2 of 6